SNEZHKO, V.I.; KHARCHENKO, P.F.

Welding equipment in the U.S.S.R. and abroad. Avtom. svar. 18 no.5:60-65 My '65. (MIRA 18:6)

1. Institut elektrosvarki im. Ye.O. Patona AN UkrSSR.

USSR/General Problems of Pathology - Tumors. Comparative Oncology. Tumors of Man U

Abs Jour : Ref Zhur Biol., No 6, 1959, 27469

Author : Kharchenko, P.G.

Inst :

Title : Remote Results of Surgical Treatment of Stomach Polyps

Orig Pub : Khirurgiya, 1957, No 7, 70-73

Abstract : 132 patients with stomach polyps were under the author's observation; of them, 86 were operated. The rest had single polyps with dimensions of 1-1.5 cm. They were treated by conservative means under which it was established that polyps may exist for several years without observable changes. In a study of remote results of stomach resection in 60 patients, good results ("feeling well", absence of pains and dyspeptic disturbances) were observed in 18 patients, satisfactory results in 11, recurring of polyps were discovered in 5, development of carcinoma in

Card 1/2 Iz 1-y khirurgicheskoy kafedry Tsentral' in-ta usovershenstvovaniya vrachey na baze Tsentral' klinicheskoy bol'nitsy Ministerstva putey soobshcheniy N. A. Semashko

KHARCHENKO, P.G., kand.med.nauk

[redacted]

Hyperplasia of a portion of the gastric mucosa. Khirurgiia 34 no.9:53-56 S '58. (MIRA 12:4)

1. Iz 1-y kafedry khirurgii (zav. - deystvitel'nyy chlen AMN SSSR prof. V.R. Braytsev) TSentral'nogo instituta usovershenstvovaniya vrachey (dir. - prof. V.P. Lebedeva).
(MUCOUS MEMBRANE) (STOMACH--DISEASES)

KHARCHENKO, Polina Georgiyevna

[Polyps of the stomach and their surgical treatment] Polipy zheludka i ikh khirurgicheskoe lechenie. Moskva, Medgiz, 1959. 125 p. (MIRA 13:12)

(STOMACH--DISEASES)

KHARCHENKO, P.G. (Moskva, ul. Usacheva, d.29, korp. 4 kv. 233)

Case of endometriosis of the rectum and vagina. Vop.onk. 5 no.8: 209-212 '59. (MIRA 12:12)

1. Iz 1-y kafedry khirurgii (zav. - deystvitel'nyy chlen AMN SSSR prof. V.R. Braytsev) TSentral'nogo instituta usovershenstvovaniya vrachey (dir. - prof. V.P. Lebedeva).
(ENDOMETRIOSIS case reports)
(RECTUM dis.)
(VAGINA dis.)

KHARCHENKO, P.G. (Moskva)

Polyps of the stomach. Med.sestra 18 no.6:25-28 Je '59. (MIRA 12:8)

1. Iz bol'nitsy imeni N.A.Semashko Ministerstva putey soobshcheniya.

(STOMACH--TUMORS)

KHARCHENKO, Petr Nikolayevich, inzh.; SMIRNOVA, N.A., prof., red.; PANIVAN, P.S., red.izd-va; BELOGUROVA, I.A., tekhn. red.

[Accident prevention in the assembly, use, and disassembly of scaffolds and trestles] Tekhnika bezopasnosti pri montazhe, ekspluatatsii i demontazhe lesov i podmostei. Pod obshchei red. N.A.Smirnova. Leningrad, Leningr. dom nauchno-tekhn.propagandy, 1962. 23 p. (Bibliotechka stroitelia po tekhnike bezopasnosti, no.12) (MIRA 16:2)

(Scaffolding--Safety measures)

KHARCHENKO, F. YE.

Tractors

Effect of structural parameters of the caterpillar engine on the traction quality of a tractor. Avt. trakt. prom, no. 3. 1952.

Monthly List of Russian Accessions, Library of Congress, June 1952. UNCLASSIFIED.

KHARCHENKO, P. Ye.

Dynamometer

Hydraulic rotary dynamograph. Avt. trakt. prom. no. 4, 1952.

Monthly List of Russian Accessions, Library of Congress, August 1952. UNCLASSIFIED.

KHARCHENKO, R.I., inzh.; SIGALOVSKIY, K.K., inzh.

Furniture boards filled with corn waste. Der.prom. 7 no.3:26-27 Mr '58. (MIRA 11:4)

1.Mebel'no-konstruktorskoye byuro Ukrpromsoveta.
(Furniture)

KHARCHENKO, R. I., inzh.; SIGALOVSKIY, K.K., inzh.

Using sedge for stuffing upholstered furniture. Der. prom. 7 no.8:15 Ag '58. (MIRA 11:9)

1. Mebel'no-konstruktorskoye byuro Ukrpromsoveta.
(Sedges) (Upholstery)

KHARCHENKO, R.I., inzh.; TSARIGRADSKIY, Ye.K., inzh.

Birch tar as a substitute for shellac. Der.prom. 8 no.3:22 Mr '59. (MIRA 12:4)

(Birch) (Wood tar)

KHARCHENKO, R.I.; TSARENGRADSKIY, Ye.K.

Improving the production of birchbark tar. Gidroliz i lesokhim. prom. 13 no.2:12-13 '60. (MIRA 13:6)

1. TSentral'noye mebel'noye konstruktorskoye byuro Ukrpromsoveta.
(Wood tar) (Birch)

KOLESNIKOV, Yu.A., inzh.; KHARCHENKO, R.I., inzh.; SIGALOVSKIY, K.K., inzh.

Use of synthetic glue for the manufacture of moldings. Der. prom. 10 no. 4:22-23 Ap '61. (MIRA 14:4)
(Moldings) (Glue)

KOLESNIKOV, Yu.A., inzh.; KHARCHENKO, R.O.; TSAREGRADSKIY, Ye.K.

Lacquers made from birch tar for furniture finishing. Der. prom. 9 no.4:15-16 Ap '60. (MIRA 13:9)

1. TSentral'noye mebel'no-konstruktorskoye byuro Ukrpromsoveta.
(Lacquer and lacquering)

KHARCHENKO, R.R., and TEMNIKOV, F.YE

Electric Measurement of Nonelectric Magnitudes. Gos-Energo-Izdat (1948)

FA 228T58

KHARCHENKO, R. R.

USSR/Electricity - Measuring Instruments Apr 52

"Experimental Determination of the Dynamic Characteristics and Structural Parameters of Moving-Coil Instruments," Docent R. R. Kharchenko, Cand Tech Sci, Moscow Power Eng Inst imeni Molotov

"Elektrichestvo" No 4, pp 62-71

On the basic of general converter theory, derives the eqs for the frequency response, transfer function, and elec equiv circuit of moving-coil instruments. Submitted 30 Oct 51.

228T58

KHARCHENKO, R.R.

Electrical Engineering
Abst.
Section B
March 1954
Instruments, Measuring
Apparatus.

621.317.7.082.74

577. Impulse behaviour of instruments with electromagnetic systems. R. R. KHARCHENKO. *Elektrichestvo*, 1953, *No.* 5, 30–4. *In Russian.*

Impulse reactions of the moving systems of electromagnetic instruments are important in many fields of measurement, e.g. ballistic measurements of magnetic quantities, recording of impulse waves and analogous variations of non-electrical quantities by electromagnetic oscillographs (particularly cardiographs), in the relations between response time and given deflections of electromagnetic relays in automatic control circuits and in the assessment of the dynamic errors of some types of vibrometers and seismographs. A systematic investigation, as presented, must distinguish between the various forms of impulse, and Duhamel's equations are appropriate for finding analytical expressions for the reactions of the instruments. However, the evaluation of the formulae for various types of damping is very laborious and this has been simplified by deriving nomograms for the determination of the ballistic errors for various forms of impulse.

E. F. KRAUS

6-22-54

KHARCHENKO, R.R., kand. tekhn. nauk, dots.

Ballistic calibration of a galvanometer connected into a steel-containing circuit. Trudy MEI no.13:103-107 '53. (MIRA 11:4)

1. Moskovskiy energeticheskiy institut im. V.M. Molotova, Kafedra elektropriborostroyeniya.
(Galvanometer)

KHARCHENKO, R.R., kand. tekhn. nauk, dots.; KUTYASHOVA, Ye.M., assist.

Method for exact measurement of alternating currents. Trudy MEI no.13:108-116 '53. (MIRA 11:4)

1. Moskovskiy energeticheskiy institut im. V.M. Molotva, Kafedra elektropriborostroyeniya.
(Electric currents, Alternating--Measurements)

A comprehe

FD-1400

USSR/Electronics - Resonance filters

Card 1/1 : Pub. 10 - 9/12

Author : Kharchenko, R. R. (Moscow)

Title : Electromechanical resonance filter of low-frequency current

Periodical : Avtom. i telem., 15, No 6, 554-562, Nov-Dec 1954

Abstract : The author shows that the electromechanical transducer [preobrazovatel'] can fulfill the functions of the electrical filter in circuits of infra-low frequencies. For one type of such filters the author investigates the frequency characteristics and considers a concrete example of its application. He shows that electromechanical filters possess definite prospects, especially in the region of applicability discussed. Two references, both by the same author: "Experimental determination of dynamic characteristics and design parameters of instruments in a magnetoelectrical system," Elektrichestvo, No 4, 1952; "Impulse reaction of instruments in a magnetoelectrical system," Elektrichestvo, No 5, 1953.

Institution :

Submitted : December 4, 1953

Kharchenko, R.R.

AID P - 4097

Subject : USSR/Electricity

Card 1/2 Pub. 27 - 8/24

Author : Kharchenko, R. R., Kand. Tech. Sci., Dotsent, Moscow

Title : Dynamics of magnetoelectric instruments under conditions of strong damping.

Periodical : Elektrichestvo, 11, 47-54, N 1955

Abstract : The author studies the behavior of magnetoelectric instruments under conditions of strong damping, i.e., when the degree of damping $\beta \geq 1$. These conditions are much less studied than those where $\beta < 1$. The degree of damping largely determines the properties, characteristics, and area of application of the various kinds of magneto-electric instruments. The author investigates the basic dynamic characteristics: transition, frequency response, ballistic, and a few time characteristics. To express these characteristics, the author introduces simple approximating formulas in which

AID P - 4097

Elektrichestvo, 11, 47-54, N 1955

Card 2/2 Pub. 27 - 8/24

the time constant of the instruments becomes their new parameter. He then separates the two most important general groups of instruments: reproducing (like oscillographs) and integrating (like fluxmeters), and determines several data for them. Two tables, 8 diagrams, 3 Soviet references (1937-1953).

Institution : Moscow Power Engineering Institute im. Molotov

Submitted : Ap 15, 1955

KHARCHENKO, R.R.

Corrections for the dynamic characteristics of electronic measuring instruments and recorders. Priborostroenie no.2:21-26 F '56. (MLRA 9:8)

(Electronic instruments)

KHARCHENKO, N.R.

SOV/144-58-9-16/18

AUTHOR: Gikis, A. F., Candidate of Technical Sciences, Docent

TITLE: Inter-University Scientific Conference on Electric Measuring Instruments and Technical Means of Automation (Mezhvuzovskaya nauchnaya konferentsiya po elektroizmeritel'nym priborom i tekhnicheskim sredstvam avtomatiki)

PERIODICAL: Izvestiya Vysshikh Uchebnykh Zavedeniy, Elektromekhanika, 1958, Nr 9, pp 130-135 (USSR)

ABSTRACT: The conference was held at the Leningradskiy elektrotekhnicheskiy institut imeni V. I. Ul'yanova (Lenina) (Leningrad Electro-technical Institute imeni V. I. Ul'yanov (Lenin)) on November 11-15, 1958. The representatives of eleven higher teaching establishments and three research institutes participated and a large number of specialists of various industrial undertakings were present.

Assistant M. M. Fetisov (Leningrad Polytechnical Institute) presented a paper on the "Basic problems of the theory of automatic electric metering instruments with reverse transformation for measuring non-electrical magnitudes". The method is based fundamentally in compensating the measured non-electrical magnitude with a similar magnitude produced by means of a transducer.
Professor N. R. Kharchenko (Moscow Lenin Order Power Institute) presented the paper "Determination of the dynamic errors of a magneto-electric oscillograph by means of analogues".
M. F. Suvid (Kiyev Polytechnical Institute) presented the paper "Measurements using magnetic bridges".
In addition to this, three further papers were read on magnetic measurements.

Kim R. Nikolay R. R.

8(2), 9(6) SOV/119-59-3-13/15

AUTHOR: Anisimov, V. I., Engineer

TITLE: The Inter-university Scientific Conference on Electrical Measuring Instruments and on the Technical Means of Automation (Mezhvuzovskaya nauchnaya konferentsiya po elektroizmeritel'nym priborom i tekhnicheskim sredstvam avtomatiki)

PERIODICAL: Priborostroyeniye, 1959, Nr 3, pp 30-31 (USSR)

ABSTRACT: This Conference was held at the Leningradskiy elektrotekhnicheskiy institut im. V. I. Ul'yanova (Lenina) (Leningrad Institute of Electrical Engineering imeni V. I. Ul'yanov (Lenin)) in November 1958. It was attended by more than 500 representatives of universities, scientific research institutes, of the OKB, the SKB (Special Design Office), of industries and other organizations. More than 50 lectures were delivered in the meetings of this Conference. In opening the conference N. P. Bereditskiy underlined the outstanding importance of automation and of measuring technique for the development of national economy. N. N. Shumilovskiy in his lecture reported on "The Trends in the Development of Methods of Radioactive Control of Production Data" and outlined the extensive

Card 1/5

possibilities of using radioactive methods in such control. Ye. G. Shrauner and S. A. Spektor reported on a new method of measuring heavy direct currents with the help of the nuclear magnetic resonance. M. A. Rozenblat investigated problems of the application of magnetic amplifiers in automation and in measuring technique. A. V. Pateyev reported on the present-day state on the prospects of automatic control technique. Ya. Z. Tsypkin investigated some peculiar features of and the prospects offered by automatic pulse systems. The lecture by B. G. Soldyrev dealt with problems of stability of discrete automatic systems. V. B. Ushakov discussed the main trends in the development of mathematical analog computers and of computers designed for industrial use. The report by V. S. Kyshyshkin deals with an electronic analog correlator for the calculation of correlation functions in the investigation of winds in the ionosphere. M. I. Turgenson reported on the most important methods, which guarantee both an active and passive freedom from disturbances in

Card 2/5

discrete selective systems. Ye. V. Novosel'tsev discussed problems of averaging, differentiation, and balancing of time-dependent functions which can be represented by electric signals. V. P. Skuridin investigated new computing devices with polarized relays. A. V. Fruze and Ye. M. Pushin reported on instrument transformers for automatic instruments with automatic recording. V. B. Ushakov and S. S. Kopay-Gora reported on a computer for the automatic centralized control of production specifications. N. M. Petisov discussed fundamental problems of the theory of automatic measuring instruments with an inverse conversion for the measurement of non-electric quantities. Ye. I. Tsayakov dealt with problems of the construction of automatic d. c. potentiometers with high accuracy. D. I. Haley discussed a high-precision automatic d. c. bridge for digital computations. The participants in the Congress listed below discussed the following subjects (which, however, are not given by the exact wording of the titles):

Card 3/5

V. A. Ivanenov The planning of measuring elements for

The Inter-university Scientific Conference on Electrical Measuring Instruments and on the Technical Means of Automation SOV/119-59-5-13/15

accurate automatic quotient-type meters in digital computations. N. N. Gherchenko: Methods of determining the dynamic errors of a magnetic oscilloscope by simulation. P. P. Ornatsky: Problems in measuring electric quantities at extremely low frequencies by electrical indicating instruments of various systems. L. P. Kulikovskiy: Novel types of a. c. compensators. A. S. Bornukrants: Automatic bridges and a. c. compensators suited for the control of the parameters of condensers in series production. L. I. Stolov: Some characteristics of midget induction motors which can be used in measuring technique and automation. B. A. Borodayev: Ultrasonic pressure- and liquid level gages. Yu. A. Skripnik: The circuitry of a phase-sensitive commutation indicator for a. c. semi-equilibrium bridges. N. F. Suvid: The application of instruments with magnetic bridges, which permit a considerable simplification of the design of the apparatus and the circuitry used in the measurement of non-electric quantities. V. F. [illegible]rents: Method of increasing the sensitivity of [illegible]gen gas analysers. P. V. Suvitskiy: Design of apparatus for measuring vibration quantities. V. V. Pasynkov: Main types of non-linear semiconductor resistors and possibilities of their application to circuitry in automation and measuring technique. G. N. Novopashennyy: Development of measuring amplifiers with semiconductor triodes. Ya. V. Novosel'tsev, N. A. Zaitsev, Ye. Ye. Afanas'yev, Ye. P. Ugryumov: Precision semiconductor frequency meter operating according to the pulse-counting principle. P. G. Nikitin and A. Bernkladnikov: Methods of measuring the magnetic field strength by means of bismuth resistors and transducers operating on the Hall effect principle. A resolution was adopted by the closing plenary meeting of the Conference, which indicates ways of improving and coordinating scientific research work in the field of automation, electric measuring- and computing technique.

Card 4/5

Card 5/5

SOV/119-59-4-6/18

9(4), 9(6)

AUTHOR: Kharchenko, R. R., Doctor of Technical Sciences, Professor

TITLE: Determination of the Dynamic Errors of an Electromagnetic Oscillograph by Application of Similarity (Opredeleniye dinamicheskikh pogreshnostey magnitoelektricheskogo ostsillografa posredstvom modellirovaniya)

PERIODICAL: Priborostroyeniye, 1959, Nr 4, pp 12-14 (USSR)

ABSTRACT: The problem of the reproducibility of time-dependent quantities by means of an oscillograph has hitherto not been exhaustively treated, and new solutions may be found. According to the opinion of the author this problem can be formulated in the following two ways: 1) Determination of the reproducibility of recording if the signal and the transmission characteristics of the oscillograph are given. This constitutes the so-called direct problem. 2) The determination of the signal, if the reproduction and the transmission characteristic of the oscillograph are given. This is the so-called inverse problem. It is clear how to solve these problems theoretically, but it proves to be difficult to apply the results to practice. For this reason other methods must be applied. The author resolved to use an electric simu-

Card 1/2

SOV/119-59-4-6/18

Determination of the Dynamic Errors of an Electromagnetic Oscillograph by Application of Similarity

lator of the oscillograph. The problem can be stated as follows: The vibration oscillograph transforms the electrical quantity i(t) (the instantaneous value of the amperage) into the non-electrical quantity $\alpha(t)$ (the ordinate corresponding to the amperage i) by a linear operation. It is therefore required that the simulator should transform the electrical quantity i(t) into another electrical quantity i'(t). This problem is solved in two stages: At first the diagram of the simulating circuit was ascertained. Second, ways and means were found of realizing it in practice. The author took 2 circuits with 4 elements into closer consideration. The expressions specifying the corresponding transmission functions are written down explicitly. The course of the calculation is given step by step. The application of similarity to this problem is an excellent means of determining rapidly and reliably the dynamic errors of a vibration oscillograph. Only the direct problem lends itself to a direct solution by simulation. There are 6 figures, 1 table, and 2 Soviet references.

Card 2/2

BYKOV, Mikhail Aleksandrovich; GRATSIANSKIY, Igor' Nikolayevich; KIFER, Isaak Iosifovich; KUTYASHOVA, Yelena Mikhaylovna; LEVIN, Mark Iosifovich; PRYTKOV, Vladimir Tikhonovich; STREKALOV, Ivan Alekseyevich; TALITSKIY, Aleksandr Vasil'yevich; KHARCHENKO, Roman Romanovich; SHUMILOVSKIY, Nikolay Nikolayevich; KASATKIN, A.S., red.; VORONIN, K.P., tekhn.red.

[Course on electric measurements] Kurs elektricheskikh izmerenii. Pod red. V.T.Prytkova i A.V.Talitskogo. Moskva, Gos.energ.izd-vo. Pt.1. 1960. 479 p. Pt.2. 1960. 430 p. (MIRA 13:10)
(Electric measurements)

TEMNIKOV, Fedor Yevgen'yevich; KHARCHENKO, R.R., prof., doktor tekhn. nauk, retsenzent; LEBEDEV, A.V., kand.tekhn.nauk, red.; POLYAKOV, G.F., red.izd-va; EL'KIND, V.D., tekhn.red.

[Automatic recording instruments] Avtomaticheskie registriruiushchie pribory. Izd.2., perer. i dop. Moskva, Gos.nauchno-tekhn.izd-vo mashinostroit.lit-ry, 1960. 459 p. (MIRA 13:7)

(Recording instruments)

S/115/60/000/02/014/031
D002/D003

AUTHOR: Kharchenko, R.R.

TITLE: Galvanometric Amplifiers With Photo-Converters for an Oscillograph

PERIODICAL: Izmeritel'naya tekhnika, 1960, Nr 2, pp 21-26 (USSR)

ABSTRACT: Galvanometric amplifiers ("GU") are widely used for electric measurements but the calculation problems of their dynamic characteristics are only lightly treated in the existing literature [Ref 1-5], e.g. of the "LETI" amplifier (designed by B.P. Kozyrev) or the photo-compensating amplifier of the Leningradskiy zavod "Vibrator" (Leningrad "Vibrator" Plant), designed by B.A. Seliber and S.G. Rabinovich. A.A. Nemura [Ref 3] studied a series of "GU" models for the type I vibrator of the "MPO-2" oscillograph using as input galvanometer the type VIII vibrator of the "MPO-2" and a vibrator of the

Card 1/3

S/115/60/000/02/014/031
D002/D003

Galvanometric Amplifiers With Photo-Converters for an Oscillograph

geophysical "GB-IV" oscillograph. The author of the present article investigated amplifiers for the type VIII vibrator of the "MPO-2" oscillograph using low-frequency galvanometers as input galvanometers, on control springs of the "Vibrator" Plant, at frequencies of 150-250 cycles. The block diagram of the galvanometric amplifier with the photo-converter, correction link and feedback circuit (Figure 1), is given. The complete circuit of the model (Figure 5), the input circuit and feedback circuit (Figure 2), and the photoconverter (Figure 3), are also illustrated. The galvanometer of the model has a frame resistance of 22 ohms, and a full critical resistance of 342 ohms. The test results are shown in graphs (Figure 6,7). At the Kafedra elektroizmeritel'noy tekhniki MEI (Chair of Electromeasuring Technology of MEI), the author took part in the development (for one channel) of a d.c. amplifier on transistors

Card 2/3

S/115/60/000/02/014/032
D002/D003

Galvanometric Amplifiers With Photo-Converters for an Oscillograph

and its substitution for the corresponding correction amplifier on electronic tubes in the mentioned system (Figure 1). Engineer S.G. Golub' participated in the experiments. The investigation results give a basis for the instrument industry for producing a series of small-size multichannel "GU" with miniature elements. There are 5 diagrams, 2 graphs, and 7 references, 1 of which is English, 1 German, and 5 Soviet.

Card 3/3

S/119/60/000/06/02/016
B014/B014

AUTHOR: Kharchenko, R. R., Doctor of Technical Sciences, Professor

TITLE: On the Problem of Determining the Accuracy of Linear Measuring Transformers

PERIODICAL: Priborostroyeniye, 1960, No. 6, pp. 3-6

TEXT: By way of introduction, the author explains the fact that the output quantity of a measuring transformer is not a constant function of its input quantity (as in the case of an idealized measuring transformer). He mentions some causes of these errors, after which he describes the inaccuracy of the usual error determination in which the input and the output quantities are measured for various points of the scale. The author suggests variants for determining the error of a measuring transformer. First, he assumes that the accuracy of the expression $Y = f(X)$, where Y and X are the output and/or input quantity, depends not only on the physical properties of such a transformer but also on the shape of this characteristic. Four scales of linear measuring transformers are graphically represented in Fig. 1. The problem of

Card 1/2

On the Problem of Determining the Accuracy of Linear Measuring Transformers

S/119/60/000/06/02/016
B014/B014

transformer errors is discussed in a general manner by means of diagram 1b. Formulas (8) and (8a) are derived, which hold for the calculation of the relative transformation error at a certain scale point and/or for the reduced error. For two high-precision transformers the author developed test circuits shown in Figs. 3 and 4. Formulas are derived for the calculation of the error of the amplification coefficient, and it is pointed out that the above-described simple methods have stood the test. In conclusion, the author discusses the applicability of these methods in studying computers and control systems for technical processes. There are 4 figures.

C

Card 2/2

85740

S/115/60/000/011/007/013
B019/B058

9.6000 (1024,1099,1067)

AUTHORS: Malinovskiy, V. N., and Kharchenko, R. R.

TITLE: A Digital Bridge Made of Semiconductor Elements

PERIODICAL: Izmeritel'naya tekhnika, 1960, No. 11, pp. 37 - 41

TEXT: D.C. bridges for measuring resistances have so far been made from electromechanical elements. The authors conducted studies concerning the design of digital bridges made of semiconductors. The key (Fig.1) is described as being the most important element of the bridge. In the scheme proposed here it consists of three junction-type triodes of the type D202 (D202), two auxiliary ballast resistors and an auxiliary source. The function of this key is described in detail, the measuring part of the bridge with the keys is dealt with next, and the bridge circuit shown in Fig.4 is finally discussed. K_1 to K_{12} are the keys, T_1 to T_{12} are triggers, HÓ is a zero instrument, ГИ (GI) is an impulse generator, and TK a trigger key. The checkup of the bridge showed that it operates safely and warrants a measuring accuracy of 0.2 ohm in the

Card 1/3

85740

A Digital Bridge Made of Semiconductor Elements

S/115/60/000/011/007/013
B019/B058

0 to 100 ohm range. It is specially pointed out that the reactance of the resistance measured does not influence the measuring result at a low inner resistance of the bridge source. There are 8 figures.

Legend to Fig.1:
1) junction-type triodes, 2) ballast resistors, 3) auxiliary source.

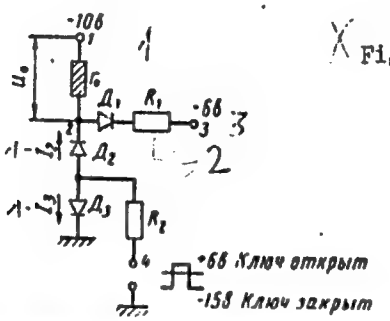

Fig.1

Fig.1

Card 2/3

25740

S/115/60/000/011/007/013
B019/B058

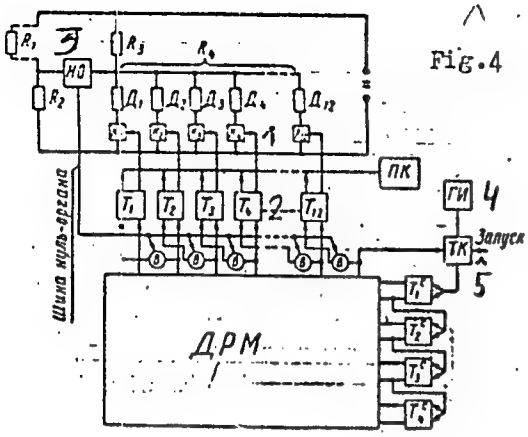

Fig.4

Fig.4

Legend to Fig.4:
1) keys, 2) trigger, 3) zero instrument, 4) impulse generator, 5) trigger key

Card 3/3

26033
S/105/61/000/008/001/004
E194/E155

9,3240

AUTHORS: Kharchenko, R.R., Professor, and
Semko, Yu.I., Engineer. (Moscow)

TITLE: Measuring amplifiers for centralised automatic control systems

PERIODICAL: Elektrichestvo, 1961, No.8, pp. 7-13

TEXT: The object of this article is to provide a general review of d.c. amplifiers operating under impulse conditions with input signals ranging from a few millivolts to some tens of millivolts and with output signals of 1 - 10 V. The type of amplifiers considered are those which accurately reproduce the signal; mis-match or zero-type amplifiers are excluded. Only electronic amplifiers are considered because magnetic amplifiers are not sufficiently accurate and galvanometer amplifiers not sufficiently fast. Amplifier errors are subdivided into two classes. The first class includes errors due to stray noise and zero drift; these errors are denoted by γ, which is the ratio of the stray signal to the rated output signal. It is shown that such errors depend not only on the magnitude of γ but also on the point of the

Card 1/8

26033

Measuring amplifiers for centralised.. S/105/61/000/008/001/004
E194/E155

amplifier scale considered. The second class of errors is associated with instability of the amplification factor and non-linearity of the amplitude characteristic. The error is denoted by λ which is the ratio of the variation in the amplification factor at an arbitrary point on the scale to the rated output. In a linear amplifier the amplitude depends only on the value of λ and not on the magnitude of the amplified signal (or point on the scale). This is also approximately true for a non-linear amplifier. If both sources are to give the same error at a given point on the scale the error γ must be much less than the error λ. Accordingly it is of primary importance to reduce zero drift and noise. Consideration is then given to those stages in the structural circuit of the amplifier which mainly govern the value of γ and λ, and it is shown that in a three-stage amplifier with negative feedback the value of λ does not depend on the coupling between the stages, whereas the value of γ does. In practice, in simple three-stage amplifiers γ depends mainly on the first stage. The simple circuit of Fig.1 is then considered; here β denotes the feedback transmission factor. A numerical example shows that in this case the requirements in respect of zero drift and noise

Card 2/8

26033

Measuring amplifiers for centralised... S/105/61/000/008/001/004
E194/E155

are very severe. Amplifiers with schematic diagrams similar to Fig.1 normally have three stages; a modulator, an a.c. amplifier and a demodulator. The modulators may be of various types but only vibrator modulators have sufficiently low stray noise. Consequently only such mechanical modulators can be used in highly accurate amplifiers for small signals using the circuit of Fig.1. However, the speed of operation of such an amplifier is quite inadequate. Accordingly more complicated d.c. amplifiers have been developed. They may be classified into two groups; the first employs a combined system for transmitting the amplified signal (such as two parallel channels, one low-frequency and one high, with common feedback) with no device for zero drift correction. The second group includes amplifiers in which the signal passes through one wide-band d.c. amplifier with a device for zero drift correction. The article proceeds to consider six schematic diagrams of special amplifiers of which the first two are of the first class just mentioned and the remainder of the second. The first schematic diagram considered is that of Fig.2, in which the notation is as follows: $Y_{\sim}$ - a.c. amplifier; YHC - direct-coupled d.c. amplifier;

Card 3/ 8

26033

Measuring amplifiers for centralised.... S/105/61/000/008/001/004
E194/E155

Σ - summator at input of direct-coupled d.c. amplifier; МДМ- d.c. amplifier with modulator at input and demodulator at output; OOC - negative feedback link; Φ - filter. Amplifiers of this circuit based on transistors have been described in the literature. The second schematic diagram considered differs from the first only in the absence of the a.c. amplifier. Both types may be equal in respect of noise level; several variants have been constructed. The schematic diagram of the next amplifier considered is shown in Fig.4 where the notation is as hitherto with the addition that: ВП is a vibrator converter; ДВ is a motor; and P is a reduction gear. In this amplifier the zero drift of the wide-band d.c. amplifier is periodically corrected. The correcting device consists of a follow-up system which automatically reduces the zero drift voltage to the threshold of sensitivity of the amplifier. A disadvantage is that there are periodic interruptions in the operation of the main amplifier. The next circuit considered is a development of the previous one: the use of a motor is avoided, thus improving the dynamics of the system and reducing its size. In this case a capacitor is connected across the feed-back circuit.

Card 4/ 8

26033

Measuring amplifiers for centralised.... S/105/61/000/008/001/004
E194/E155

motor and a reduction gear. These are all standard components of an automatic electronic potentiometer. If the zero drift exceeds the threshold of sensitivity of the device, the follow-up system automatically balances the d.c. amplifier and annuls the zero drift. As zero drift is quite slow the follow-up system can easily correct it. In general, this system is better than the previous one. Its bandwidth depends on the natural frequency characteristic of the d.c. amplifier. Investigations have shown that amplifiers of this type are promising. In an experimental model the remanent zero drift did not exceed some tens of microvolts during four hours, and instability of the d.c. amplification factor was of the order of 0.2%. There are 7 figures and 34 references: 26 Soviet and 8 non-Soviet. The four most recent English language references read as follows:

Ref.22: T.J. Marcus. "Highly sensitive electronic chopper". Electronics, 1959, V.32, No.40.
Ref.28: B. Shackl and M. Beaney. "A zero correcting for use with d.c. amplifiers". Electronic Eng., 1957, V.29, No. 352.
Ref.32: J. Cederbaum, P. Balaban. "Automatic drift compensation in d.c. amplifiers". Rev.Sc.Instr., 1955, No. 8.

Card 6/8

26033

Measuring amplifiers for centralised.... S/105/61/000/008/001/004
E194/E155

Ref.26: F.R. Bradley, R.M. Coy. Electronics, 1952, No.5.
SUBMITTED: March 8, 1961

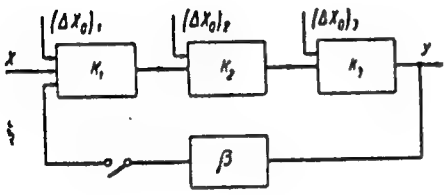

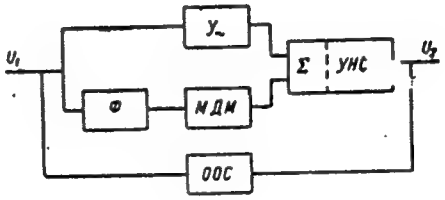

Card 7/ 8 Fig. 1 Fig. 2

DODIK, S.D.; KHARCHENKO, R.R., doktor tekhn. nauk, prof., retsenzent; KUTYASHOVA, Ye.M., kand. tekhn. nauk, dots., nauchnyy red.; DIKAREVA, A.I., red.; BELYAYEVA, V.V., tekhn. red.

[Transistorized d.c. voltage and current regulators]Poluprovodnikovye stabilizatory postoiannogo napriazheniia i toka. Moskva, Izd-vo "Sovetskoe radio," 1962. 352 p. (MIRA 15:12)

(Voltage regulators)
(Electric power supply to apparatus)

S/119/62/000/001/002/011
D201/D302

AUTHORS: Konchalovskiy, V.Yu. and Kharchenko, R.R.

TITLE: A d.c. measuring amplifier with automatic zero drift correction

PERIODICAL: Priborostroyeniye, no. 1, 1962, 10 - 12

TEXT: The authors describe a wide-band small-signal d.c. measuring amplifier with a continuous astatic drift correction. The amplifier has the following sections: 1) Directly coupled d.c. amplifier having gain K and zero drift ΔU_{20}: the zero drift referred to the input is $U_{10} = \Delta U_{20}/K$; 2) A resistive voltage divider D, having a transfer coefficient 1/K and connected between the output of the d.c. amplifier and the correcting circuit; 3) A correcting circuit, consisting of series connected mechanical modulator, a.c. amplifier, reversible motor, reduction gear and a rheostat, whose slider determines the zero level of the static amplitude characteristic of the d.c. amplifier. It is easily shown that the residual

Card 1/2

KHARCHENKO, R.R., prof. (Moskva); KONCHALOVSKIY, V.Yu., inzh. (Moskva)

Automatic measuring devices with analog and digital outputs.
Elektrichestvo no.4:36-40 Ap '62. (MIRA 15:5)
(Electric power plants--Automation)
(Electric measurements)

S/105/63/000/004/001/002
A055/A126

AUTHORS: Kharchenko, R.R., Doctor of Technical Sciences, Professor; Syropyatova, R.Ya., Seitov, A.A., - Engineers

TITLE: Stabilized semiconductor power supplies for automatic measuring devices

PERIODICAL: Elektrichestvo, no. 4, 1963, 39 - 44

TEXT: Basing themselves on the work by S.D. Dodik [Poluprovodnikovyye stabilizatory napryazheniya i toka (Current and voltage semiconductor-stabilizers), Izd. "Sovetskoye Radio", 1962], the authors developed and analyzed two types of stabilized semiconductor power supplies, for 20 v and 5 v, respectively. The first part of the present article is devoted to the theory of the semiconductor voltage stabilizers of the comparison type; formulae are derived, giving the stabilization coefficient K_{inp}, the stabilizer output impedance r_{outp} and its temperature coefficient γ as functions of the parameters of the circuit; the conditions are determined under which K_{inp} becomes as high as possible, and r_{outp} and γ as small as possible. In the second part of the

Card 1/2

article, the authors describe the models of the two types of stabilized power supplies developed by them: 1) $U_{outp} = 20$ v; $I_{load} = 0 \div 50$ ma; 2) $U_{outp} = 5$v; $I_{load} = 20 \div 200$ ma. The complete circuit diagrams of both models are reproduced and commented upon. In both models, the controlling element consists of a composite triode $T_1 - T_2 - T_3$. The experimentally plotted characteristics of both stabilizers are reproduced. A table shows that the total instability of these stabilizers is included between 0.05 and 0.1%. There are 8 figures and 1 table.

ASSOCIATION: Moskovskiy energeticheskiy institut (Moscow Power-Engineering Institute)

SUBMITTED: June 30, 1962

L 2460-65 EWT(d)/EED-2 Po-4/Pq-4/Pg-4/Pk-4 AFTC(b)/RAEM(i)/ESD(dp)/
[illegible] GG

S/0105/64/000/008/0001/0008

ACCESSION NR: AP4048385

AUTHOR: [illegible]ova, R. Ya. (Engineer); Kharchenko, R. R. (Professor)

TITLE: Signal converters for magnetic recording and reproduction of metering information in analogue form

SOURCE: Elektrichestvo, no. 8, 1964, 1-8

TOPIC TAGS: magnetic tape recording, signal converter, converter system

[illegible] The article is concerned with a short examination of the construc- [illegible] the sub- [illegible] and investigat[illegible] converter system [illegible] of them

Card 1/2

L 8462-65

ACCESSION NR: AP4048385

ASSOCIATION: Moskovskiy energeticheskiy institut (Moscow Power Institute)

SUBMITTED: 26Oct63 ENCL: 00 SUB CODE: EC, DP

NO REF SOV: 016 OTHER: 006 JPRS

Card 2/2

50 c

L 41182-65 EWT(d)/EWP(c)/EWP(v)/T/EWP(k)/EWP(1) Pf-4
ACCESSION NR: AP5004677 S/0115/64/000/009/0058/0059 70 18 B

AUTHOR: none

TITLE: Fourth scientific and technical conference on "Cybernetics for the improvement of measurement and inspection methods"

SOURCE: Izmeritel'naya tekhnika, no. 9, 1964, 58-59

TOPIC TAGS: cybernetics, electric measurement, electric quantity instrument, digital computer, electronic equipment, electric engineering conference

ABSTRACT: The conference was held 1-4 July at the All-Union Scientific Research Institute of Metrology by the Section of Electrical Measurements of the Council on the Problem of "Scientific Instrument Making" of the State Committee on Coordination of Scientific Research Work in the USSR together with the All-Union Scientific Research Institute of Electrical Measurement Instruments and the Leningrad Regional Administration of the Scientific and Technical Division of the Instrument Making Industry. More than 400 delegates from 29 cities of the country participated. Fifty-seven reports were heard and discussed. Reports were given by: P. V. NOVITSKIY (Leningrad)--"Definition of the Concept of Informational Error in Measurement and its Importance in Practical Use" and "On the Problem of the Average Informational Criterion of Accuracy Throughout the Entire Scale of an Instrument"; Ye. A.

Card 1/4

L 41182-65
ACCESSION NR: AP5004677

17

KUPERSCHMIDT (Moscow)--"On Determination of the Criteria of Accuracy for Measurement Devices"; S. M. MANDEL'SHTAM (Leningrad)--report on a new criterion of accuracy of measurement instruments; P. F. PARSHIN (Leningrad)--report on optimization when using Fourier transforms on electronic digital computers; S. P. DMITRIYEV, G. Ya. DOLGINTSEVA and A. A. IGNATOV (Leningrad)--proposal of a new method for solving problems of optimum filtering for non-stationary random signals and interference; I. B. CHELPANOV--"Calculation of the Dynamic Characteristics of an Optimum Complex Two-Channel System which Uses Signals from a Position Meter and from a Speed Meter"; R. A. POLUEKTOV (Leningrad)--"Optimum Periodic Correction in the Measurement of Continuous Signals"; S. P. ADAMOVICH (Moscow)--"Analysis and Construction of Devices for Correction of Non-linearity and Scaling for Unitary Codes; G. V. GORELOVA (Taganrog)--"A Method for Statistical Optimization in Graduating the Scales of Electrical Measuring Instruments"; M. A. ZEMEL'MAN (Moscow)--"Analog-Digital Voltage Converter with Automatic Error Correction"; B. N. KALINOVSKIY, V. S. KALENCHUK and I. A. YANOVICH (Kiev)--"Automatic Monitoring of the Parameters of the Electrical Signals of Complex Radio and Electronic Equipment"; V. P. PEROV (Moscow)--"Operational Cybernetics as an Independent Scientific Specialization"; Ye. N. GIL'BO (Leningrad)--"On the Problem of Effective Non-linear Scales"; A. I. MARKELOV (Moscow)--"Devices for Preliminary Processing of the Results of Measurements Presented in the Form of

Card 2/4

L 41182-65

ACCESSION NR: AP5004677

20

Graphic Recordings For Subsequent Introduction of the Information into Universal Digital Computers"; O. M. MOGILEVER and S. S. SOKOLOV (Leningrad)--"On a Method for Reducing Excess Information"; T. V. NIKOLAYEVA (Leningrad)--"A Device for Temporal Discretization of Continuous Signals"; A. A. LYOVIN and M. L. BULIS (Moscow)--"Optimization of the Transmission of Telemetric Information as a Means for Raising the Efficiency and Eliminating Interference"; D. E. GUKOVSKIY (Moscow)--"On a Statistic Approach to the Detection of Events in Automatic Inspection"; M. I. LANIN (Leningrad)--"Method for Calculating the Holding Time of Communications in a Centralized Inspection System or Constant Servicing Time"; O. N. BRONSHTEYN, A. L. RAYKIN and V. V. RYKOV (Moscow)--"On a Single-Line Mass Service System with Losses"; V. M. SHLYANDIN (Penza)--report on circuit designs for direct compensation electrical digital measuring instruments; A. N. KOMOV (Novocherkassk)--report on a new method for compensation of digital bridges; M. N. GLAZOV (Leningrad)--report on the problem of voltage-to-angular rotation conversion; V. S. GUTNIKOV (Leningrad)--"Methods for Construction of Frequency Capacitance Pickups with a Linear Scale"; R. Ya. SYROPYATOVA and R. R. KHARCHENKO (Moscow)--report on the determination of the amplitude-frequency and phase characteristics of PFM and PWM modulators; Ye. I. TSNYAKOV (Novocherkassk)--"The Phototransistor as a Switch for Electrical Measurement Purposes"; N. V. MALYGINA (Leningrad)--a report on ways for making universal equipment for measurement of current, voltage and power; P. P. ORNATSKIY and V. I. ZOZULYA (Kiev)--reports on the construction of static voltmeters, wattmeters and

Card 3/4

L 41182-65

ACCESSION NR: AP5004677

15

phase meters; A. V. TRIKHANOV, I. G. SMYSHLYAYEV, N. I. SABLIN, V. M. RAZIN and V. A. GORBUNOV (Tomsk)--report on a device for automatic processing of the measurements of vibration amplitude of pneumatic hammers; L. K. RUKINA and V. G. KNORRING (Leningrad) --report on the development of a digital compensator for measuring pressure, force, etc.; N. B. DADUKINA (Leningrad)--report on a method for constructing frequency pickups for gas analysis; Ye. M. KARPOV, V. A. BRAZHNIKOV and B. Ya. LIKHTTSINDER (Kuybyshev)--reports on analysis and recording of boring speeds; Yu. V. PSHENICHNIKOV (Kuybyshev)--"A High Speed Voltage-to-Digital Code Converter for ac Pickups"; G. P. VIKHROV and V. K. ISAYEV (Vilna)--"A Highly Accurate Digital Peak-to-Peak Voltmeter"; and S. M. PSRSIN (Leningrad)--"A Low Level Analog-Digital Voltage Converter."

ASSOCIATION: none

SUBMITTED: 00 ENCL: 00 SUB CODE: EE, EC

NO REF SOV: 000 OTHER: 000 JPRS

me

Card 4/4

L 19622-65 EEO-2/EWT(d)/EEC(k)-2/EEC-4/EED-2 Pg-4/Pk-4/P1-4/Pm-4/Po-4/Pq-4/
[illegible]/RAEM(1)/ESD(dp)/ESD(c)
ACCESSION NR: AP5001033 S/0115/64/000/0[illegible]/0045/0049

AUTHOR: Syropyatova, R. Ya.; Kharchenko, R. R.

B

TITLE: Measuring the dynamic characteristics of pulse-frequency and pulse-[illegible] modulators

SOURCE: Izmeritel'naya tekhnika, no. 11, 1964, 45-49

TOPIC TAGS: PFM, PDM, pulse frequency modulation, pulse duration modulation

gm

ABSTRACT: A method for measuring the dynamic characteristics of PFM and

Card 1/2

NR. AP5001033

[illegible] the PDM pulses with sawtooth generator pulses on

[illegible] figures and 17 formulas.

[illegible]ATION: none

L 29624-65 EEC-4/EEC(k)-2/EWT(d) Pq-4/Pk-4/Pl-4/Po-4/Pq-4

[illegible] AP5003069 [illegible] 48/0051

[illegible] Yu. N. (Engineer); Khorchenko, P. P. (Professor)

[illegible] Measuring converters of electric quantities into pulse frequency

[illegible] Elektrichestvo, no. 1, 1965, 48-53

TOPIC TAGS: measuring instrument, analog digital converter

ABSTRACT: Based on 1959-64 Soviet and a few Western publications, a review [illegible] of the principles of operation of linear converters of electric quantities into pulse frequency used for measuring purposes. A general formula for the error in such converters is evolved. The open-loop d-c voltage-to-[illegible] frequency converter is regarded as fundamental. An RC-multivibrator [illegible] desirability of using Si transistors and temperature stabilization is mentioned; principal technical characteristics are indicated. The operation of a blocking

L 29924-65

ACCESSION NR: AP5003069

/

oscillator as a controllable frequency generator is briefly discussed as well as [illegible] which a periodic integration of the [illegible] meters usually have a feedback [illegible] the principle of [illegible] meters. The latest closed [illegible] integrator with 2 pulse feedback [illegible] The output-pulse [illegible] the [illegible] description of two-voltage [illegible]

ASSOCIATION: Moskovskiy energeticheskiy institut (Moscow Power [illegible]

SUBMITTED: 01Jul64 ENCL: 00 SUB CODE: EC

NO REF SOV: 013 OTHER: 004

Card 2/2

KHARCHENKO, R.R. (Moskva)

Measuring analog converters. Avtometriia no.1:45-56 '65. (MIRA 18:7)

L 27782-66 EWT(d)/EWP(1) IJP(c) GG/BB

ACC NR: AP6013009 SOURCE CODE: UR/0410/66/000/001/0017/0027

42
B

AUTHOR: Yevlanov, Yu. N. (Moscow); Kharchenko, R.R. (Moscow)

ORG: none

TITLE: Measuring linear constant voltage to frequency and voltage to pulse length converters with pulsed feedback [Paper presented at the 7th All-Union Conference on Automatic Control and Methods of Electrical Measurements held in Novosibirsk in September 1965]

16

SOURCE: Avtometriya, no. 1, 1966, 17-27

TOPIC TAGS: analog digital converter, feedback amplifier, linear automatic control

ABSTRACT: This paper offers the general theory, circuit diagrams, operating characteristics, error estimates, and a description of prototype operations of strictly linear converters which transform constant voltages either into variable frequency or pulse length output signals. The outline of the principles used for the design of the converters is followed by an analysis of the requirements imposed on the individual elements, and a description of the optimum parameter relationships. In the 0.05 – 5 V range the two converters tested showed a 0.1% (0.05%) nonlinearity, 0.1% (0.05%) stability in 4 hrs. of operation following a 20 min warm up period, and a 0.2% (0.2%) temperature stability in +20 – 50C temperature range. The speed of response of these converters will be discussed in a subsequent article. Orig. art. has: 14 formulas and 4 figures.

SUB CODE: 09 / SUBM DATE: 16Sep65 / ORIG REF: 009 / OTH REF: 003
UDC: 681.142.621

Card 1/1

L 46288-66
ACC NR: AP6015209 SOURCE CODE: UR/0410/65/000/001/0045/0056

3

AUTHOR: Kharchenko, R. R. (Moscow)

ORG: none

TITLE: Analog measuring transducers 10

SOURCE: Avtometriya, no. 1, 1965, 45-56

TOPIC TAGS: measuring instrument, primary detector, measuring transducer, sensor

ABSTRACT: Based on 1946-65 Soviet published sources, this review briefly presents the state of the art and formulates a few research problems in the theory and construction of analog measuring transducers. The latter are treated in a broad sense and include multi-input elements, electric-to-electric, and nonelectric-to-electric measurand-to-signal transducers (primary and secondary).

UDC: 62-503

Card 1/2

L 46288-66
ACC NR: AP6015209

0

These problems are briefly considered: Taring (calibration) and accuracy of transducers (systemization of existing and development of new methods are desirable; establishment of accuracy classes for transducers is necessary; analysis of errors). Measuring servo-transducers (static and astatic, with input and output variables of the same or different kinds). Dynamic characteristics of transducers (clarification of intrinsic dynamic characteristics, methods of their measurement, and methods of experimental-data processing are needed; an investigation of dynamic characteristics of function generators and modulators is important). Special problems: connection between measuring instruments and computers, conversion of R into E or I, linearization and scaling of measuring circuits. Orig. art. has: 3 figures and 10 formulas.

SUB CODE: 09 / SUBM DATE: 05Sep64 / ORIG REF: 039
141

LC

Card 2/2

PYATNITSKIY, I.V.; KHARCHENKO, R.S.

Extraction of citrate and tartrate complexes of metals in the presence of diisoamylamine. Ukr.khim.zhur. 28 no.9:1115 '62. (MIRA 15:12)

1. Kiyevskiy gosudarstvennyy universitet im. T.G. Shevchenko.
(Organometallic compounds)

PYATNITSKIY, I.V.; KHARCHENKO, R.S.

Extraction of the citrate complex of iron (III) in the presence of tri-n-butylamine. Ukr. khim.zhur. 29 no.9:967-973 '63. (MIRA 17:4)

1. Kiyevskiy gosudarstvennyy universitet im. T.G.Shevchenko.

FYATNITSKIY, I.V.; KHARCHENKO, R.S.

Extraction of citrate complexes of metals in the presence of tributylamine. Ukr. khim. zhur. 30 no.3:311-312 '64. (MIRA 17:10)

1. Kiyevskiy gosudarstvennyy universitet im T.G. Shevchenko.

PYATNITSKIY, I.V.; KHARCHENKO, R.S.

Effect of strong electrolytes on the extraction by amyl alcohol of a tributylaminocitrate complex of iron. Ukr. khim. zhur. 30 no.4:416-418 '64. (MIRA 17:6)

1. Kiyevskiy gosudarstvennyy universitet imeni Shevchenko.

KHARCHENKO, S.

Fundamental method in the training of personnel. Grazhd.av. 12 no.8:10-11 Ag '55. (MIRA 15:8)
(Aeronautics, Commercial) (Employees, Training of)

KHARCHENKO, S. I.

33608 Mekhanizm Oformleniya Epileptcheskogo Sucorozhnogo Pristupa. (Eksperim. Issledovaniye). Trudy Kurskogo Gos. Med. In-ta, T. 11, Vyp. 2, 1948, C. 167-74

SO: Letopis'nykh Statey, Vol. 45, Moskva, 1949

KHARCHENKO, S. I.

KHARCHENKO, S. I. -- "Investigation of Losses and Flow of Melted Waters (Based on Material from DNIGL)." Main Administration of the Hydrometeorological Service, Council of Ministers USSR. State Order of Labor Red Banner Hydrological Inst. Leningrad, 1955. (Dissertation for the Degree of Candidate in Technical Sciences)

SO: Knizhnaya Letopis', No 1, 1956

KHARCHENKO, S.I.

Investigation of the loss of snow meltwaters and their runoff rate. Trudy GGI no.57:5-53 '56. (MLRA 10:6)
(Yerik Valley--Runoff)

KHARCHENKO, S.I.

Formation of spring floods in steppes of the lower Don Valley. Trudy GGI no.71:5-35 '59. (MIRA 12:5)
(Don Valley--Floods)

KHARCHENKO, S.I.

Water balance of drainage basins in zones of deficient moisture. Trudy GGI no.73:55-89 '60. (MIRA 13:6)
(Sal Steppe--Hydrology)

KHARCHENKO, S.N. [Kharchenko, S.M.]

Antibiotic properties of species of the section Monoverticillata, genus Penicillium, isolated from rhizosphere of agricultural plants in the Ukraine. Report No. 3: Effect of species of the section Monoverticillata, genus Penicillium, on the germination of cabbage seeds and on certain bacterial plant diseases. Mikrobiol.zhur. 23 no.1:46-50 '61. (MIRA 14:5)

1. Institut mikrobiologii AN USSR.
(PENICILLIUM) (PLANTS, EFFECT OF ANTIBIOTICS ON)
(BACTERIA, PHYTOPATHOGENIC)

KHARCHENKO, S.I.

Methodology of predicting spring runoff in the Don River basin.
Trudy GGI no.82:3-33 '62. (MIRA 15:6)
(Don Valley--Runoff)

CHEBOTAREV, A.I.; KHARCHENKO, S.I.

Effect of autumn plowing on runoff. Trudy GGI no.82:34-49 '62. (MIRA 15:6)

(Runoff) (Plowing)

KHARCHENKO, S.I.; GROMOVA, R.V.; TEPTSOV, M.V.

Flood in the Kan, Agul, and Biryusa Rivers in August 1960 and methodology of calculating the runoff of rain. Trudy GGI no.99:177-194 '62. (MIRA 15:9)
(Kan River—Floods) (Biryusa River—Floods)

KHARCHENKO, S.I.; ROO, S.S.

Experimental studies of the infiltration capacity of drainage areas and prospects for calculating changes in rainwater losses in calculating flood flows. Trudy GGI no.107:112-135 '63. (MIRA 16:7)

(Soil absorption) (Runoff)

KHARCHENKO, S.I.

Heat and water balance method for a basis of irrigation norms. Trudy GGI no.125:3-33 '65. (MIRA 18:12)

KHARCHENKO, S.I.; KHARCHENKO, K.I.

Total evaporation from the soil under conditions of a zone of insufficient moisture and the methodology of calculating it. Trudy GGI no.125:34-57 '65.

(MIRA 18:12)

KHARCHENKO, S.I.; TISHCHENKO, P.V.

Methodology of lysimetric research on irrigated lands.
Trudy GGI no.125:58-68 '65.

Experimental studies of the elements of water balance on irrigated lands of the Lower Don Irrigation System.
Ibid.:121-165 (MIRA 18:12)

MIKHAYLOV, V.A.; KHARCHENKO, S.K.

Accounting for nonadditivity of molecular interactions in the lattice model of a solution. Zhur. fiz. khim. 38 no.10:2372-2379 O '64. (MIRA 18:2)

1. Institut neorganicheskoy khimii Sibirskogo otdeleniya AN SSSR, Novosibirsk.

MIKHAYLOV, V.A.; KHARCHENKO, S.K.; NAZIN, A.G.

Study of the binary systems: water - tri - n-butylphosphate and water - di - n-butylphosphoric acid. Izv. Sib. otd. AN SSSR no.7:50-56 '62 (MIRA 17:8)

1. Institut neorganicheskoy khimii Sibirskogo otdeleniya AN SSSR, Novosibirsk.

MIKHAYLOV, V.A.; KHARCHENKO, S.K.

Study of the ternary system water - tri-n-butyl phosphate - di-n-butylphosphoric acid. Izv. SO AN SSSR no.3 Ser. khim. nauk no.1:70-82 '63. (MIRA 16:8)

1. Institut neorganicheskoy khimii Sibirskogo Otdeleniya AN SSSR, Novosibirsk.
(Butyl phosphates) (Phosphoric acid)
(Phase rule and equilibrium)

MIKHAYLOV, V.A.; KHARCHENKO, S.K.; NAZIN, A.G.

Extraction equilibria and the theory of nonelectrolyte solutions. Trudy Kom.anal.khim. 14:76-86 '63. (MIRA 16:11)

KHARCHENKO, S.M.

Stimulating effect of the culture liquid of Penicillium sp. on germination of cotton and wheat seeds. Nauk. zap. Kyiv. un. 16 no.20:147-152 '57 (MIRA 13:3)
(Penicillium) (Cotton)
(Wheat)

KHARCHENKO, S.N. [Kharchenko, S.N.]

Controlled cultivation of Penicillium sp. by the method of forced antagonism. Mikrobiol. zhur. 20 no.3:37-41 '58 (MIRA 11:11)

1. Iz kafedry mikrobiologii i antibiotikov Kiyevskogo gosudarstvennogo universiteta im. T.G. Shevchenko.
(PENICILLIUM)
(BACTERIAL ANTAGONISM)

ROTMISTROV, M.N. [Rotmistrov, M.M.]; STETSENKO, A.V. [Stetsenko, O.V.]; KULIK, G.V. [Kulyk, H.V.]; VASILEVSKAYA, I.A. [Vasyleva'ka, I.O.]; KHARCHENKO, S.N. [Kharchenko, S.M.]

Study of new synthetic antimicrobial substances. Mikrobiol. zhur. 21 no.3:31-35 '59. (MIRA 12:10)

1. Z kafedri mikrobiologii Kiivs'kogo derzhavnogo universitetu.
(SALICYLIC ACID rel cpds)
(ANTIBIOTICS chem)

KHARCHENKO, S.M.

Physiology of fungi producing penicillin. Mikrobiol. zhur. 22 no. 1:60-66 '60. (MIRA 13:10)

1. Iz Instituta mikrobiologii AN USSR.
(PENICILLIUM)

KHARCHENKO, S.N. [Kharchenko, S.M.]

Antibiotic properties of species of the section Monoverticillata of the genus Penicillium isolated from the rhizosphere of agricultural plants of the Ukraine. Report No. 2: Antibiotic properties of species of the section Monoverticillata of the genus Penicillium in relation to phytopathogenic bacteria and fungi. Mikrobiol. zhur. 22 no. 5:45-51 '60. (MIRA 13:10)

1. Institut mikrobiologii AN USSR.
(PENICILLIUM) (BACTERIA, PHYTOPATHOGENIC)
(FUNGI, PHYTOPATHOGENIC)

KHARCHENKO, S.M. [Kharchenko, S.M.]

Antibiotic properties of some species of the section Monoverticillata, genus Penicillium, isolated from the rhizosphere of agricultural plants in the Ukraine. Report No.1: Antibiotic spectrum of the activity of some species of the section Monoverticillata, genus Penicillium. Mikrobiol. zhur. 22 no.4:27-31 '60. (MIRA 13:11)

1. Iz Instituta mikrobiologii AN USSR.
(PENICILLIUM) (ANTIBIOTICS) (RHIZOSPHERE MICROBIOLOGY)

MIKHAYLOVNINA, A.A. [Mykhailovnina, A.O.]; SERDYUK, L.S.; KHARCHENKO, S.M.

Isolation of ergosterin from the mycelium of Dendrodochium toxicum. Mikrobiol.zhur. 26 no.4:60-62 '64.

(MIRA 18:10)

1. Institut mikrobiologii i virusologii AN UkrSSR.

KHARCHENKO, S.M.; MIKHAYLOVNINA, A.O. [Mykhailovnina, A.O.]; AKOROMKO, S.L.

Biosynthesis of dendrodochin. Mikrobiol.zhur. 26 no.6:37-40 '64. (MIRA 18:8)

1. Institut mikrobiologii i virusologii AN UkrSSR.

ZELEPUKHA, S.I.; KARPENKO, M.K.; KHARCHENKO, S.M.

Second Congress of the Ukrainian Microbiological Society.
Mikrobiol. zhur. 27 no.3:91-93 '65. (MIRA 18:6)

MALASHENKO, Yu.R.; KHARCHENKO, S.N.

Effect of various factors on the antibiotic activity of dendrodochin. Mikrobiol. zhur. 26 no.5:18-22 '64. (MIRA 18:7)

1. Institut mikrobiologii i virusologii AN UkrSSR.

TYAPKIN, K.F. Prinimali uchastiye: GOLIK, A.I., inzh.; KHARCHENKO, S.P., inzh.; FILIPPOVA, T.S., inzh.; BORUSHKO, T.I., red.izd-va; IVANOVA, A.G., tekhn. red.

[Interpretation of gravity anomalies caused by finite geologic structures along the strike] Interpretatsiia gravitatsionnykh anomalii, obuslovlennykh konechnymi po prostiraniiu geologicheskimi ob"ektami. Moskva, Gos. nauchno-tekhn. izd-vo lit-ry po geol. i okhrane nedr. Pt.1. 1961. 78 p. (MIRA 14:11)
(Gravity prospecting)

TYAPKIN, K.F.; KHARCHENKO, S.P.

Possibilities of the determination of the upper and lower boundaries of geological formations based on the results of gravity observations of contacts. Geofiz.razved. no.7:45-53 '62. (MIRA 15:7)
(Gravity prospecting)

TYAPKIN, K.F.; GOLIK, A.I.; KHARCHENKO, S.P.

Interpretation of gravity anomalies under conditions of block structure of the objects being studied. Geofiz. sbor. no.4:80-100 '63. (MIRA 16:9)

1. Dnepropetrovskiy gornyy institut imeni Artema.